EURO-WALL®

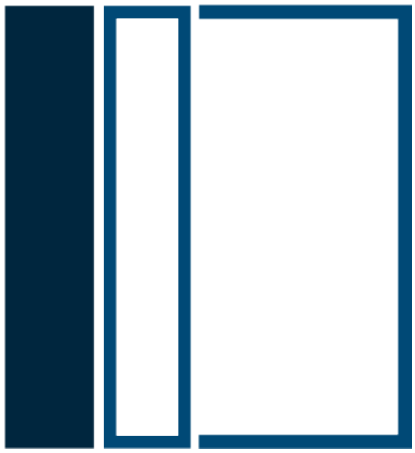

VISTA MULTI SLIDE™ INSTALL GUIDE

MANUFACTURING

2200 Murphy Court
North Port, Florida 34289
888.989.3876 • 941.979.5316

888.989.EURO (3876)
www.euro-wall.com

SHOWROOM

1211 Stirling Road, Unit 102,
Dania Beach, Florida 33004

Important
Before beginning the install, read the instructions in their entirety. Perform install using the recommended methods contained within this guide. Deviating from recommended install procedures could impair functionality and could void any warranty.

Caution
It is the obligation of the building owner, contractor, architect or installer to ensure that door systems being installed comply with all building codes and regulations pertaining to the install location. Euro-Wall, LLC. assumes no responsibility for failure to meet applicable laws, ordinances, building codes, etc.

Description of Supplied Parts
Upon delivery please inspect for any noticeable damage and check supplied materials with included packing list. If there is any damage and / or any missing components, please contact Euro-Wall as soon as possible. For installs with multiple opening units, do not mix and match any components even if the units are the same dimensions.

Protection of Unit During Construction
It is important that during the construction phase the door system components are protected and covered in a clean dry location away from any factors that could cause damage. Door systems that are stored during the construction phase can often times be exposed to situations that can cause permanent damage such as cement splatter, tar, paint,weld spray, falling objects, construction dust, sandblasting, etc. After installation of the door system is completed and construction is still being performed, ensure that the large opening where the door system is installed does not become a major in and out access point for contractors and subcontractors. Damage done during the construction phase can be irreparable and can cause significant setbacks with new panels needing to be constructed.

Panel Protective Film
If your project comes with protective film, remove all protective film from panels, frames and any other metal extrusion within 30 days of job delivery. Failure to do so could cause finish damage voiding the product warranty.

Considerations Before You Get Started
Space: Make sure you have the appropriate working space in and around the install opening. It is best practice to assemble the frame on top of saw horses (using at least four, one for each corner), therefore, make sure you have adequate room to assemble the frame in the area around the opening. Additionally, leave plenty of room without clutter to maneuver panels during install.

Power: Ideally power should be connected and accessible for tool operation and to ensure optimal lighting conditions for the install.

Moving Panels: Never “walk panels” and never try to move panels with only one person. Always lift and move panels by hand or using glass suction cups using at least two people. For installs less than 8’ in height, use a minimum of two installers. For panels over 8’ tall, a team of four is recommend for the install.

EURO-WALL®
2026 Euro-Wall, LLC • www.euro-wall.com

A. Tools Required

Step A.1 - Tools Checklist

Please make sure you have all of the required tools listed below before performing the install.

- ✓ Screw guns and chargers
- ✓ Extension bits Phillips #2 / #3 for tapcons
- ✓ 5/16” drill bit (≥10” long)
- ✓ Drill bits for steel, concrete and wood
- ✓ Hand screwdrivers (Phillips #2, #3, and flathead)
- ✓ #10-32 Tap
- ✓ 2.5mm allen key
- ✓ 4mm allen key
- ✓ 6mm allen key
- ✓ 7mm square allen key
- ✓ Rubber mallet
- ✓ SDS gun
- ✓ Laser level
- ✓ 2’, 4’ and 6’ levels
- ✓ Pencil
- ✓ Chalk line
- ✓ String line (for measuring square)
- ✓ Channel locks
- ✓ Snips
- ✓ Utility knife
- ✓ 3M tape
- ✓ Tool to cut metal
- ✓ Tape Measure
- ✓ Saw horses (min 4)
- ✓ Caulk gun
- ✓ Glass cups for moving panels (min 4)
- ✓ Shop-Vac
- ✓ Ladder
- ✓ Broom / dustpan
- ✓ Garbage can / garbage bags
- ✓ Copy of install guide

Step A.2 - Disposables Checklist

Please make sure you have all of the required tools listed below before performing the install.

- ✓ Tapcons (if drilling into concrete)
- ✓ Screws for installing frame into substrate
- ✓ 100% Silicone
- ✓ DOW 795
- ✓ Shims
- ✓ Sill pan (width of the opening plus extra for play)
- ✓ Windex / glass cleaner
- ✓ Clean rags
- ✓ Paper towels
- ✓ Cardboard / moving blankets

Step A.3 - Labor Checklist

Please make sure you have the adequate number of installers

- ✓ For installations with panels under 8 feet, recommended minimum of 2 installers
- ✓ For installations with panels over 8 feet, recommended minimum of 4 installers

NOTE: All Interior wood clad veneer products should be properly finished or sealed within 36 hours of delivery or stored in a climate controlled space until it can be properly finished or sealed.

B. Parts / Pieces Included

Below you will find a summary of the parts and pieces that are included with the door system. For a comprehensive checklist please see the packing list included with your order.

Step B.1 - Frame Checklist

- ✓ Jamb Track (2)
- ✓ Header Track (1)
- ✓ Sill Track (1) - 2 track, 3 track, 4 track or 5 track option. *See **Figure B.1** below to identify the type used for this install*
- ✓ Snap Track (E0012) *See **Figure B.1***
- ✓ Header / Jamb Trim (E0013) *See **Figure B.1***
- ✓ Condensation Drain (E0243, E0367, E0040)
- ✓ 2 Track Add-on (≥ 6 track) (E0167)
- ✓ Track filler (E0109)
- ✓ P Hook with Mount (E0096 & E0011)

Step B.2 - Panel Checklist

Each system comes with a number of panels allocated in the work order. Each door panel must be installed in the correct sequence, please refer to the installation drawing and panel labeling for the correct install sequence.

FIGURE B.1: SILL CONFIGURATIONS

Two Track (E0015)

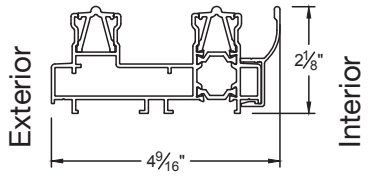

Four Track (E0018)

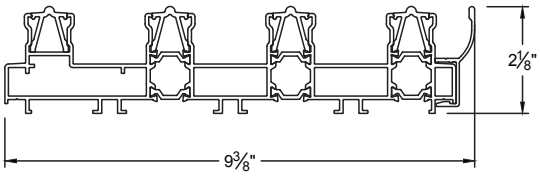

Three Track (E0016)

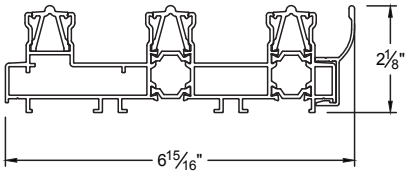

Five Track (E0019)

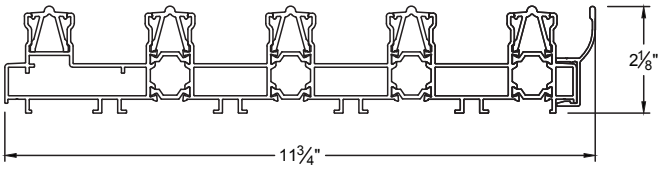

Track Filler
(E0109)

2-Track Add-On
(E0167)

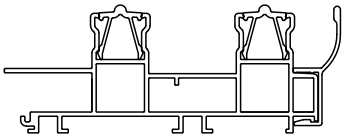

Snap Track
(E0012)

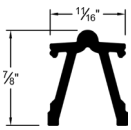

Jamb/Header Trim
(E0013)

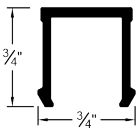

WM Condensation Drain
(E0243)

HT Condensation Drain
(E0367)

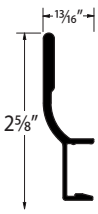

RF Condensation Drain
(E0040)

2026 Euro-Wall, LLC • www.euro-wall.com

FIGURE B.2: HARDWARE CHECKLIST

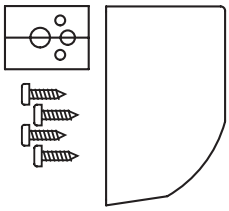

C0042
Door Bumper

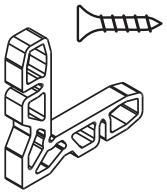

C0028
Frame L-Bracket & Frame Screws

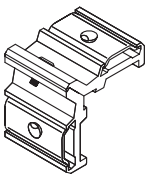

C0029
Adjustable/Kamel Corner Key

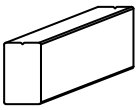

C0280
Split Frame Adapter

C0033
1/2” Hole Plugs

C0315
Drain Hole Plugs

C0037
Screw Used for: Header Interlock Plug, Bottom Drain Cover, and Condensation Drain

C0388
#21 Drill Bit

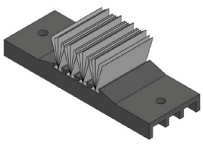

C0349
Bottom Drain Cover

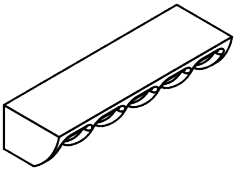

C0342
Pocket Riser Gap Filler

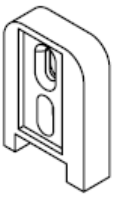

C0350
Interlock End Cap

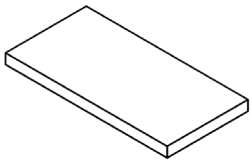

C0144
Interlock End Cap Setting Block

C0337
Drain Insert

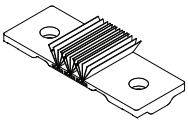

C0026
Header Interlock Plug

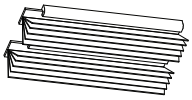

C0078
Corner Astragal Weatherstrip Holder

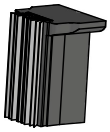

C0178
Astragal Gap Filler

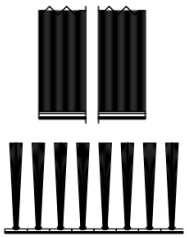

C0364
2”x1”x1” Dust Plug

C0030
Small Pawl Catch

C0031
Large/Active Pawl Catch

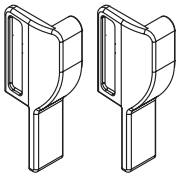

C0032 | C0681 | C0682
RF HT WM
Condensation Drain End Caps

C0035
Water Management Kit
Only provided if water management kit was ordered

C. Opening Preparation

Step C.1 - Measure, Level, Square & Clean

- ✓ Measure opening at least 3 points *(see **Figure C.1**)* to check for plumb, square and level of the opening
- ✓ Ensure that there is only a maximum header deflection of 3/16” or less
- ✓ Vacuum / sweep opening to be clear of dust / dirt / debris

FIGURE C.1: MEASURING THE OPENING

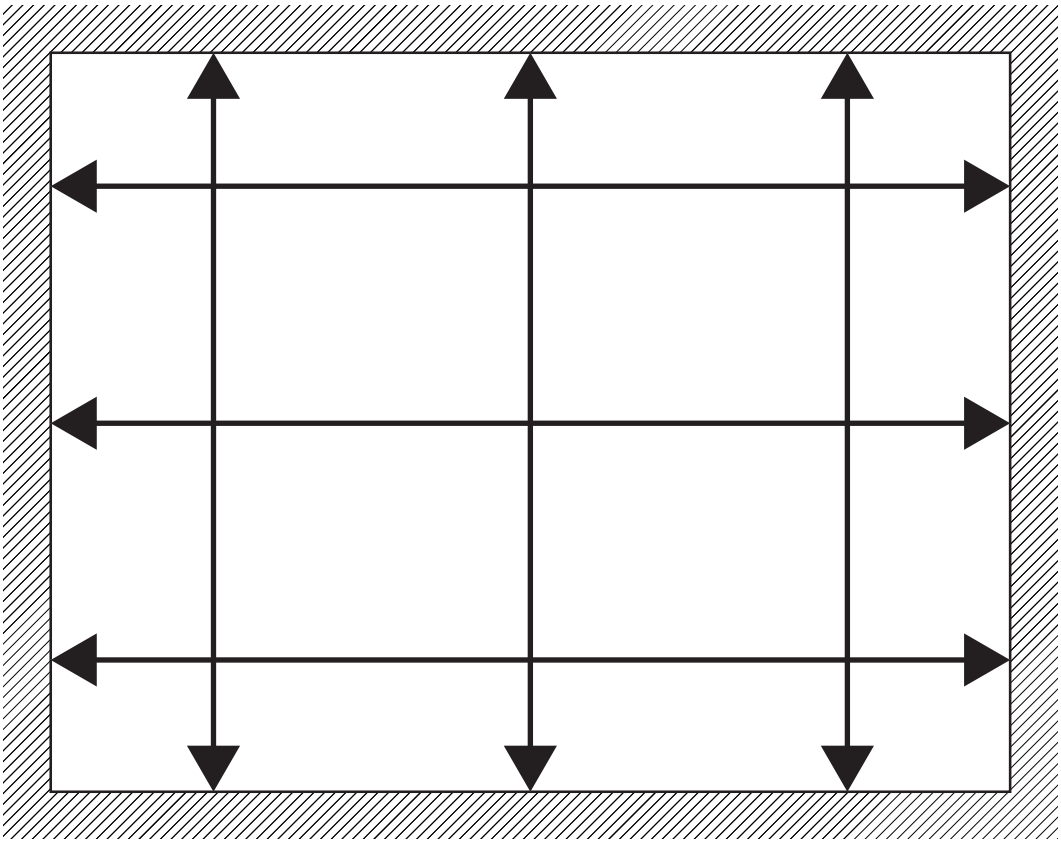

QR CODE: VIEW VIDEO INSTRUCTIONS ON MEASURING THE OPENING

EURO-WALL®
2026 Euro-Wall, LLC • www.euro-wall.com

Step C.1 - Measuring for Pocket Applications

When measuring for an interior (closed) pocket application you need to accommodate 2 1/2” in your pocket for the multi slide interlock to pass freely into the pocket. Additionally, you need to leave a 7/8” space on the opposite track side for clearance inside the pocket *(see **Figure C.2** below).*
For exterior (open) pocket, you need to leave 7/8” clearance, plus the width of the jamb for a flush finish *(see **Figure C.3** below).*

FIGURE C.2: INTERIOR (CLOSED) POCKET CONFIGURATION

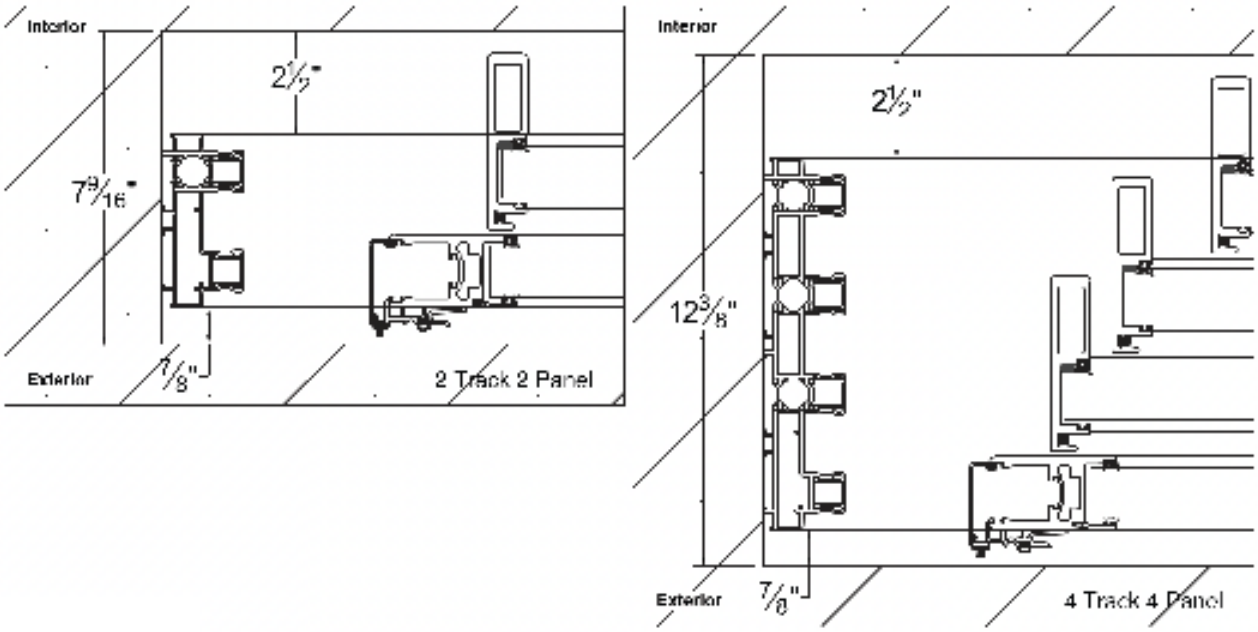

FIGURE C.3: EXTERIOR (OPEN) POCKET CONFIGURATION

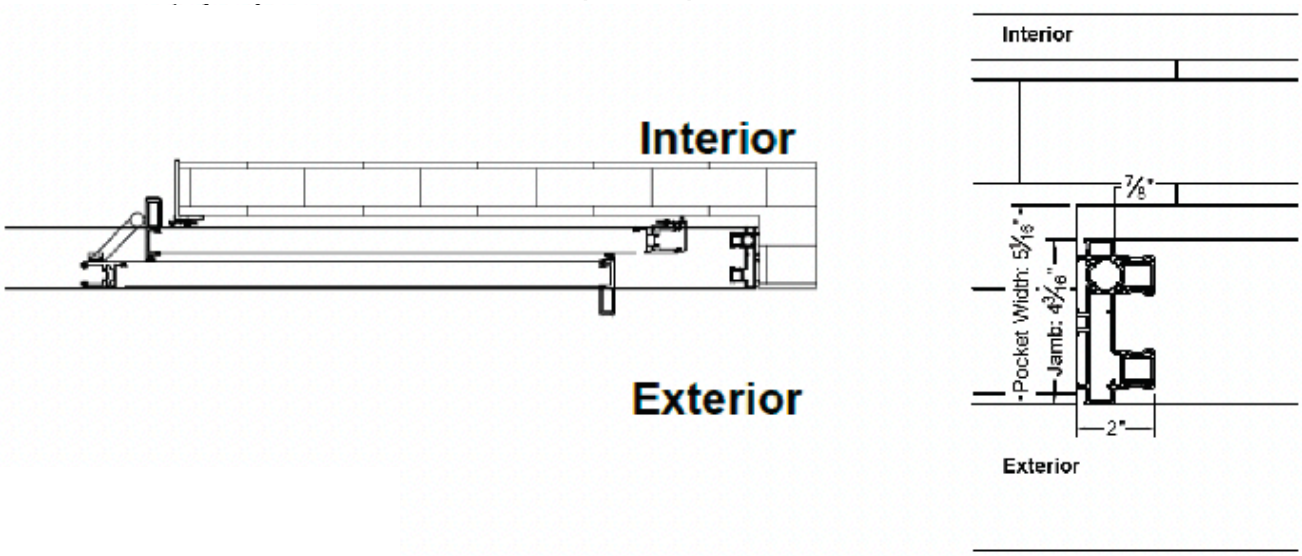

Exterior (open) pocket:
Pocket Width = Jamb width + 7/8”

D. Embed Options

Figure D.1 - Embed Options Cross Sections
Embed Options with Water Management

NO EMBED

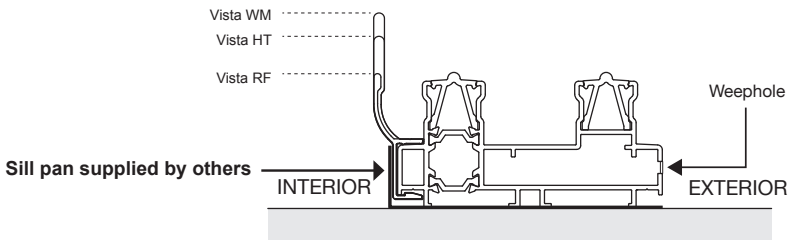

NOTE: Exterior slope recommended for any top mount or half embed condition.

HALF EMBED

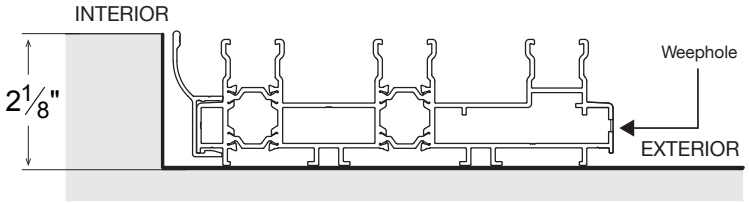

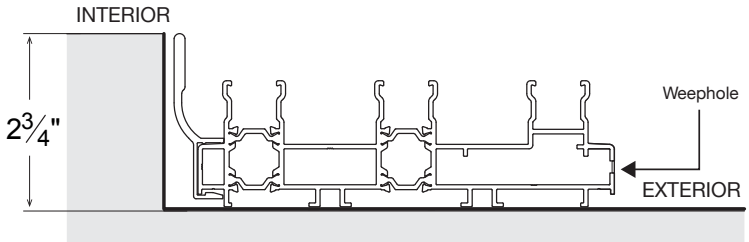

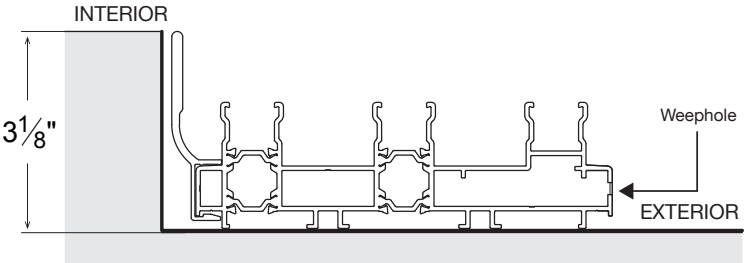

FULL EMBED
(with water management)

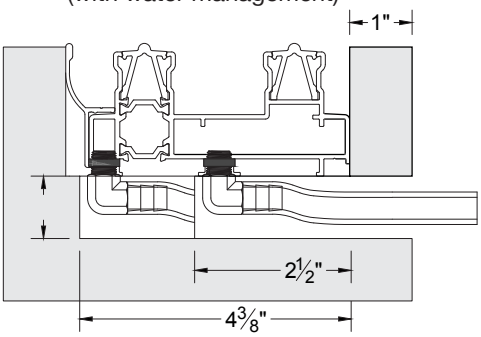

NOTE: Euro-Wall recommends using a sill pan for all door installations. For additional information on ADA sills, please contact your Euro-Wall representative.

EURO-WALL®
2026 Euro-Wall, LLC • www.euro-wall.com

E. Frame Assembly

Step E.1 - Sealing the Frame

Place all frame pieces on saw horses. Fill and seal the opening of all chambers in the sill with 100% silicone. The number of chambers will vary and will be determined by the number of tracks for your particular project. Look down each chamber verifying they are completely filled with silicone and no daylight shows through the track.

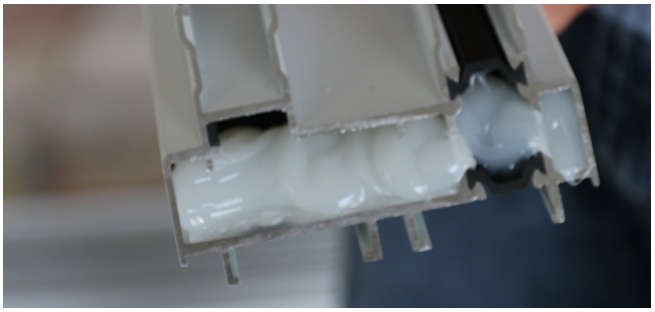

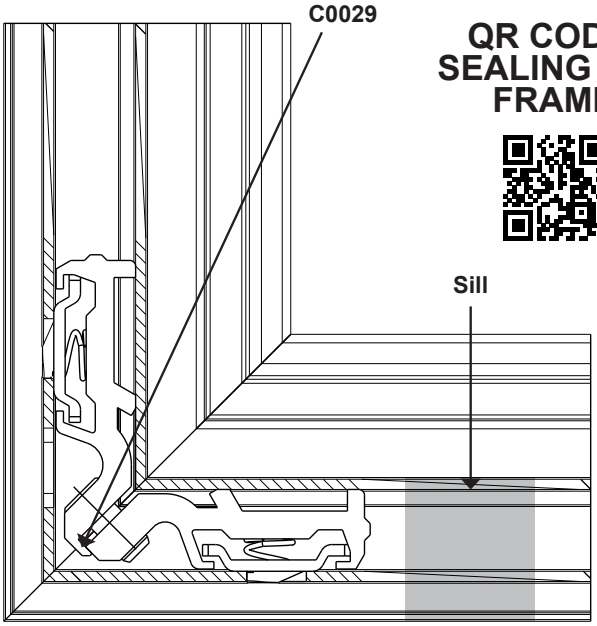

QR CODE: SEALING THE FRAME

Step E.2 - Install the Frame Corner Keys and Attach the Jamb Tracks to the Sill Track

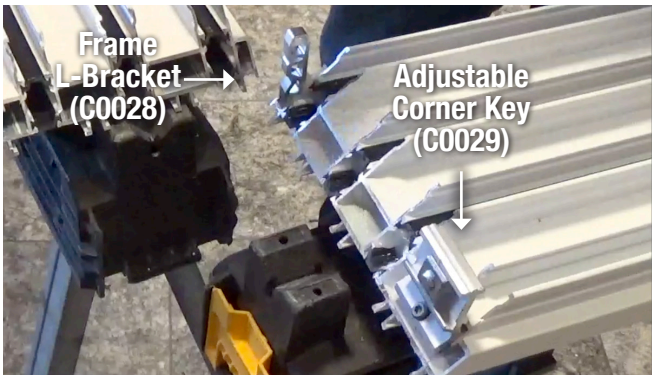

First, use a 4mm allen key and loosen the allen bolt on the frame adjustable corner key (C0029). This will make it easier to connect the jamb and sill tracks. Next, insert the adjustable corner key into the sill track into the largest chamber. Lastly, insert the frame L-bracket on the opposite side of the adjustable corner key.

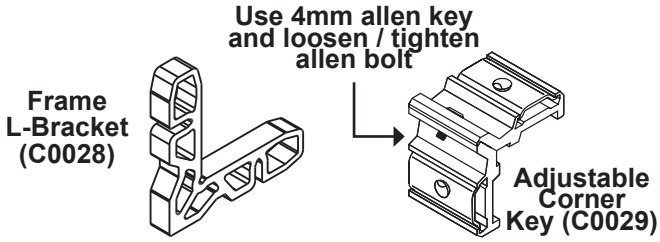

QR CODE: INSTALLING CORNER KEYS

2026 Euro-Wall, LLC • www.euro-wall.com

Make sure all of the chambers in the jamb track are sealed with silicone (reference step E.1) and connect the jamb track by sliding it over top of the sill track's corner key(s) and L-Bracket. Repeat process for both jambs. Add sealant to miter.

QR CODE: INSTALLING JAMB TRACK INTO SILL TRACK

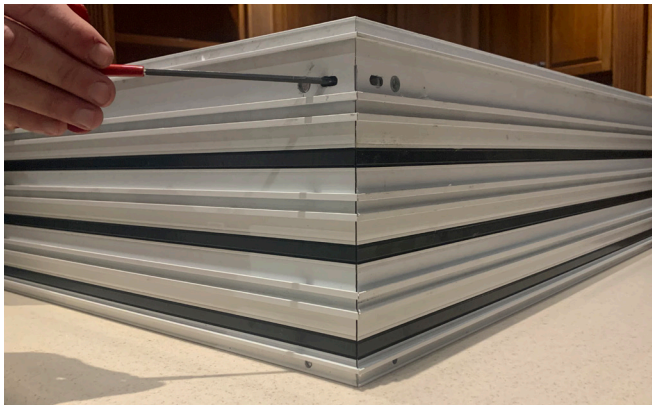

Use a 4mm allen key to tighten the adjustable corner keys on both sides of the frame. Seal the corner joint holes with 100% silicone.

Secure the four corner keys on each side of the frame with frame screws (C0028). Dip screws in DOW 795.

**QR CODE:
SECURING CORNER KEYS**

Step E.3 - Install the Sill Snap Track

Measure and cut your Snap Track to length. Starting at either jamb side, push one end of the Snap Track into the sill track until it snaps snuggly into place. Slide the Snap Track all the way to the jamb on either side of the frame. You may now continue to push the rest of the Snap Track into the sill track with a rubber mallet.

EURO-WALL®
2026 Euro-Wall, LLC • www.euro-wall.com

Step E.4 - Drill Interior Track Holes

Locate the pre-drilled holes in the interior most track of the system that are either at the ends or middle of the system. Drill through the interior most track. *(Remove all shavings when complete)*

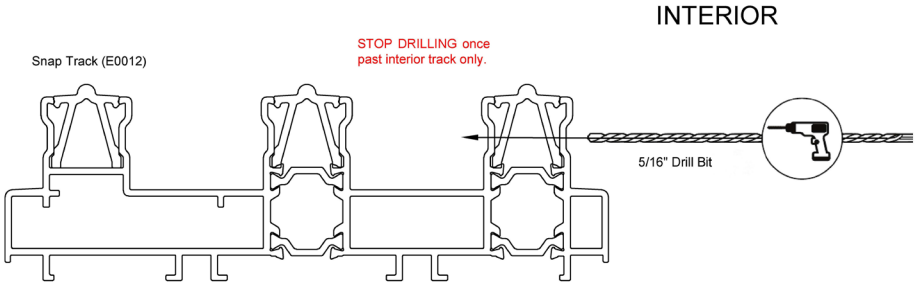

Step E.5 - Install the Condensation Drain (E0040, E0367, E0243)

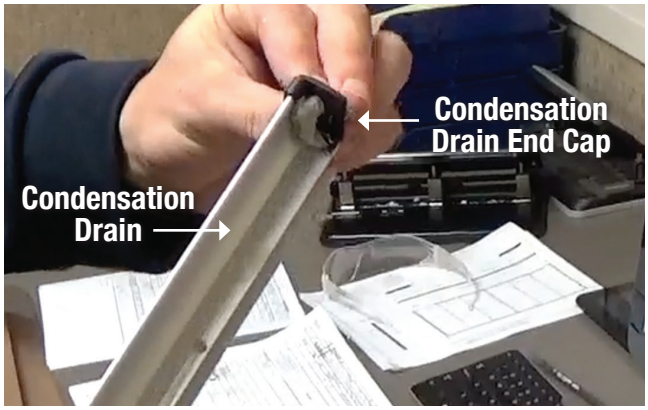

Place a bead of 100% silicone along the inside edges of the condensation drain end caps. Snap in place on both ends of the sill and header condensation drains. Smooth excess silicone where the condensation drain end cap and the condensation drain meet, creating a water tight seal.

Condensation Drain End Cap (C0032, C0681, C0682)

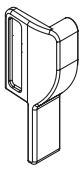

Condensation Drains

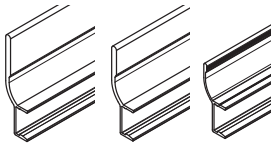

(E0243, E0367, E0040)

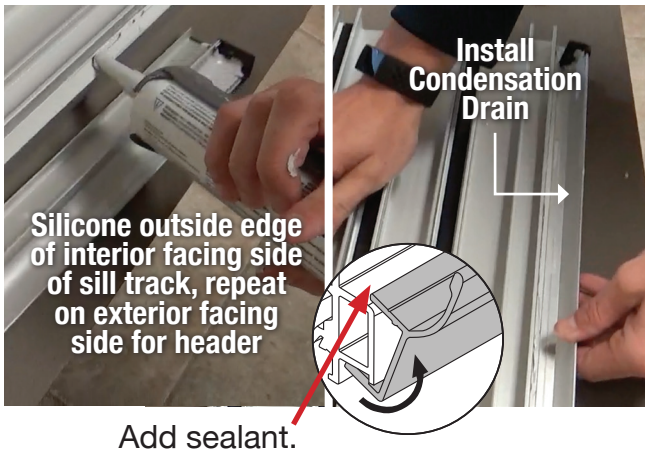

Place a bead of 100% silicone along the outside flat edge of the interior facing side of the sill track and outside flat edge of the exterior facing side of the header track. The condensation drain then snaps to the **interior facing side of the sill track** and on the **exterior facing side of the header track.** After snapped into place, run a bead of 100% silicone across the condensation drain and sill / header track seam. Next, use provided condensation drain screws (C0037) to anchor the condensation drain every 2 feet along the header and sill.

Screw Locations

QR CODE: INSTALL CONDENSATION DRAIN

F. Dry Fit Frame

Step F.1 - Fit and Tack Frame into Place

Make sure opening is clean and clear of dirt / debris. Move frame into opening verifying opening is large enough. With the frame in position, temporarily tack into place through the jambs. All anchor screw locations on the frame come pre-drilled.

QR CODE: DRY FIT FRAME PROCESS

Step F.2 - Level & Plumb Frame

Check sill for level and plumb, shim where necessary. There should be no more than 1/16” sill sag at the center span of the sill. There should be no bow in the sill at any location.

Step F.3 - Pre-Drill Opening Substrate

Once the frame is shimmed and leveled, prepare the substrate by drilling through all frame anchor screw locations into the opening substrate where necessary. The type of drill bit used will vary depending on the substrate. Remove frame and vacuum / sweep clean debris.

EURO-WALL®
2026 Euro-Wall, LLC • www.euro-wall.com

G. Install the Frame

Step G.1 - Sealing Sill Track Opening

Make sure opening is clean of all dirt and debris. Seal sill track opening location with DOW 795 or 100% silicone. Place frame into opening and embed entire sill track into the sealant.

QR CODE:
SEALING THE SILL OPENING

NOTE: All frame anchor screw locations are pre-drilled

Step G.2 - Securing the Sill Track

Position frame so that the jamb is plumb and level with adequate space for shimming and then tack into place with screws. Repeat for the second jamb. Proceed to securing the sill track. Level the sill track placing shims at least at every other pre-drilled anchor screw location and anywhere else shimming is needed. **Make sure to use hex head anchor screws only when securing the sill.** Dip screws in silicone and secure sill at every anchor screw location. Ensure that the sill remains level after every anchor location is secured and adjust as necessary.

IMPORTANT! Do not let an excess amount of silicone get into anchor holes. Water needs to travel freely through the track chambers. Do not over tighten screws as this could cause the frame to bow or damage the thermal break, which could lead to leaking.

QR CODE: SECURING THE SILL TRACK

Dip all sill track screws in silicone

Sill hole plugs (C0033)

2026 Euro-Wall, LLC • www.euro-wall.com

Step G.3 - Place Drain Hole Plugs

After sill is leveled and secured into position, place the drain hole plugs (C0315) into all interior anchor holes. Additionally place a single drain hole plug (C0315) on the exterior per track channel. Place hole plugs (C0033) into all remaining anchor holes.

Step G.4 - Securing the Jambs Tracks

Re-check jambs for level and plumb and secure jamb into place with screws. Do not over tighten screws as this could cause the frame to bow. After screwing the jambs securely into the opening, check again for level and plumb.

Step G.5 - Securing the Header Track

Starting at either of the jambs, shim and secure the header into place proceeding down the entire length of the header checking for level with a two foot level. Take care not to over tighten screws. After header is secured, re-verify level with a four foot level across the entire length of the header.

EURO-WALL®
2026 Euro-Wall, LLC • www.euro-wall.com

Step G.6 Securing the 2-Track Add-On (E0167) (If Using 2-Track Add-On)

Apply sealant to the lower groove of the 2-track add-on (E0167), and the upper lip of the main track. Hook the 2-track add-on into the groove on the bottom of the main track and rotate into place. Ensure that the groove is correctly interfaced to the main track, and ensure good sealant coverage.

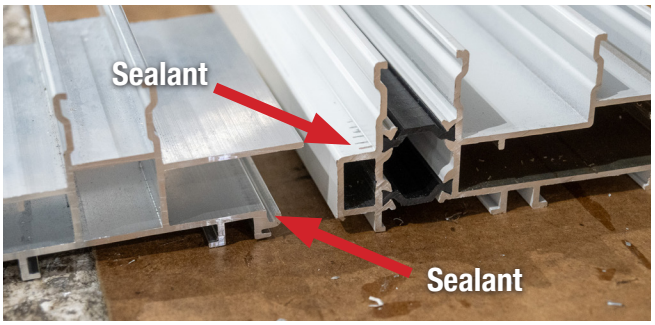

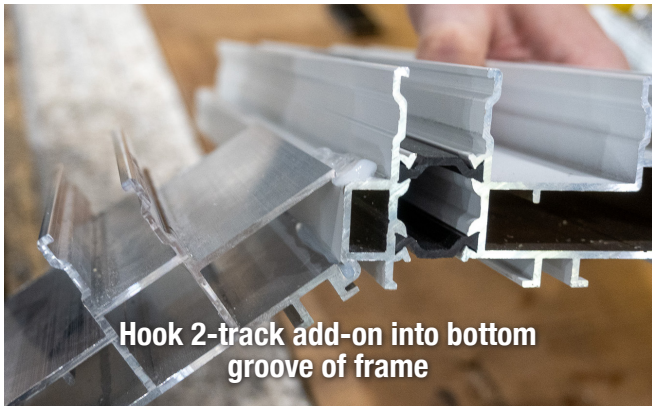

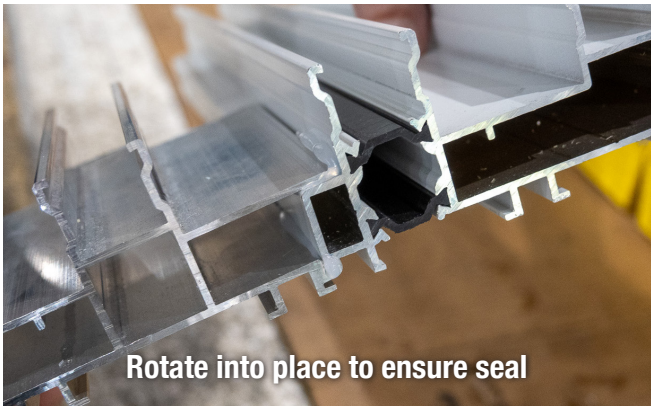

H. Install Jamb Trim & Header Trim (E0013)

Step H.1 - Install the Jamb Trim

Measure and cut your Jamb Trim to length. Starting at either the top or bottom of the jamb tracks THAT DO NOT GET PAWL CATCHES, push one end of the jamb trim into the jamb track until it snaps snugly in place. Slide the jamb trim all the way to the end of the jamb. Continue pushing the rest of the jamb trim in the jamb tracks with a rubber mallet.

Step H.2 - Install the Header Trim

To install the Header Jamb Trim into the header, follow the same instructions used for installing the Snap Track listed in step E.3.

Jamb & Header Trim (E0013)

I. Water Management

Step I.1 - Horizontal Weepholes

For systems that are half embed, no embed, and do not have a Vista High Tide or Vista Weathermax Riser option, follow the instructions below:

Use a 5/16” drill bit and drill through the face of all the tracks up until, **and not through,** the track that contains a panel when the door system is closed (See Figure I.1 and I.2). Drill 3 holes evenly spaced along each panel section. See Figure I.2 for drill hole schedule / location.

(Remove all shavings when complete)

Figure I.1 - Cross Section View

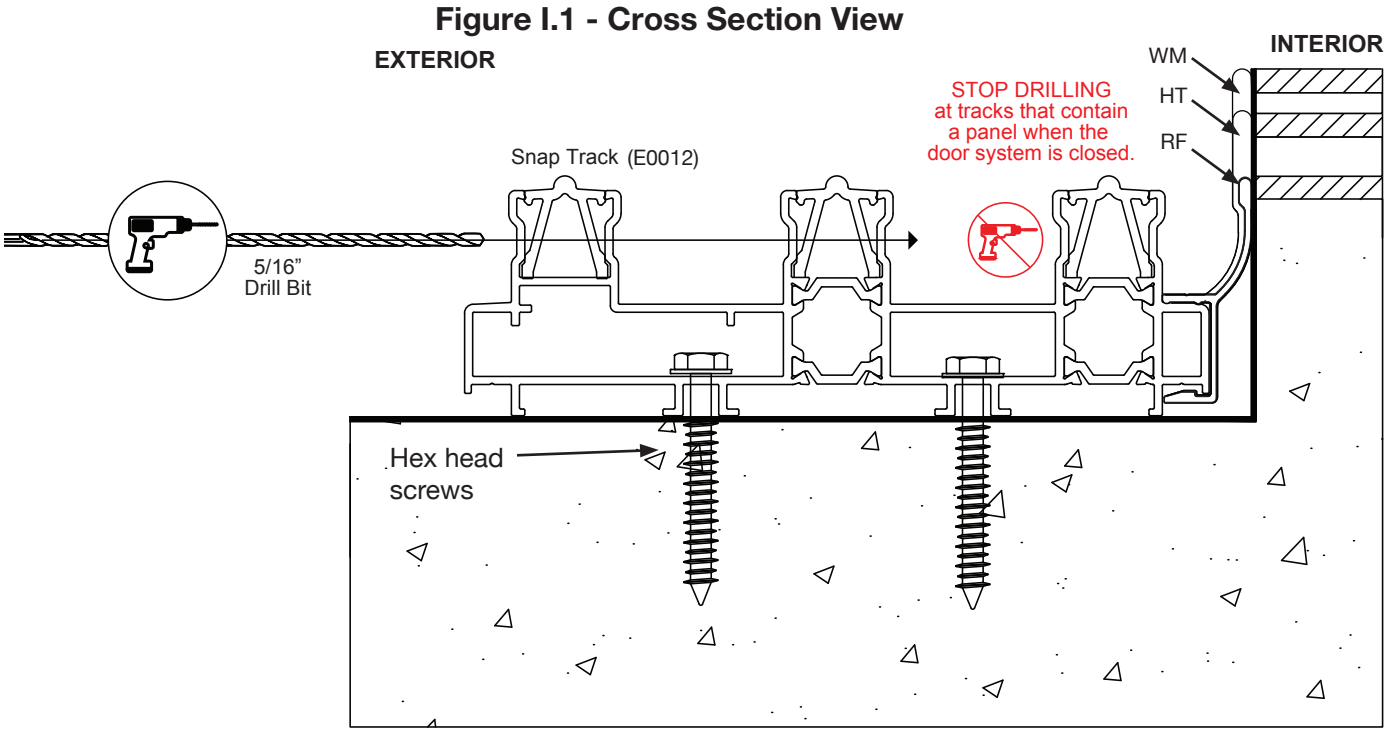

Figure I.2 - Top Down View

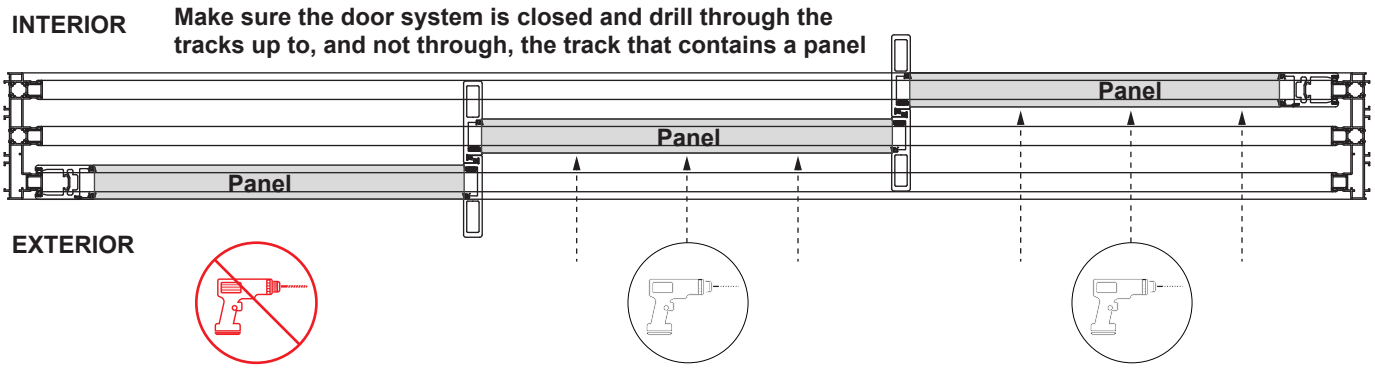

J. Bottom Drain Cover (C0349)

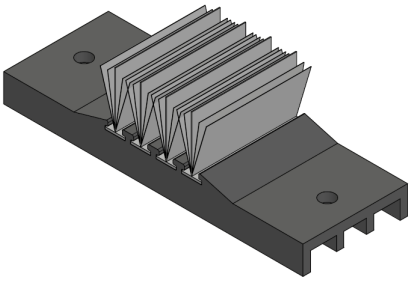

Step J.1 - Identifying the Sill Drain Hole Cover (C0349)

You will need to install the sill drain hole cover at every panel interlock. Ensure you have C0349 and **NOT** C0026 which is used in the header.

Step J.2 - Silicone Space & Place Drain Insert

Silicone the space BETWEEN the two oval drain holes using 100% silicone, ensuring a complete dam in the chamber is created. Do not obstruct the drain holes. Place the drain insert (C0337) into the oval drain hole that will be **open to the exterior when the panels are installed and the system is fully closed** using silicone. Fill the hole with the drain insert all the way to the top of the sill channel with silicone, ensuring silicone reaches the bottom of the chamber.

Only silicone the space between the holes

Step J.3 - Position Drain Hole Cover

Position the drain hole cover over the drain holes and insert one side of the drain cover.

Step J.4 - Rotate Drain Hole Cover

With one edge inserted rotate cover until sitting flush on the channel surface.

Step J.5 - Secure Drain Hole Cover

Secure the drain hole cover with provided self-tapping screws (C0037).

2026 Euro-Wall, LLC • www.euro-wall.com

K. Installing Track Filler

NOTE: Tile or other third-party materials used in place of Euro-Wall Track Filler (E0109) have not been tested. If such materials are used, Euro-Wall does not guarantee the water rating or performance of the system.

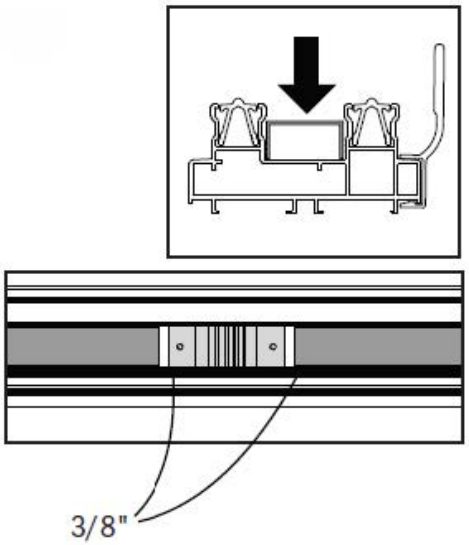

Measure and cut the sill filler. Cover all the space between sill tracks and leave 3/8" clearance to the side of each sill drain cover.

IMPORTANT

Fastener placement confirmation may be required for code inspections. Removal of sill filler may not be possible once it is installed. Make sure all measurements, pictures, and adjustments are made to sill prior to applying sill filler.

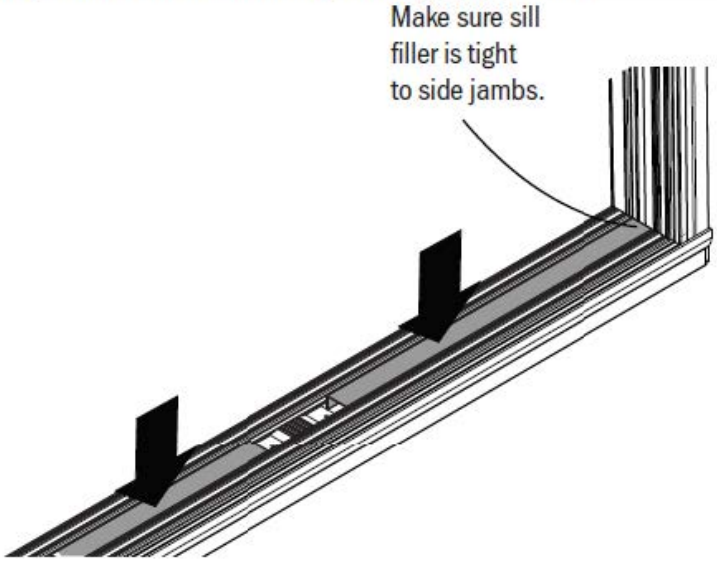

Step K.1 - Installing Tile or Other Sill Filling Material

Follow the steps outlined for installing the track filler, with the following addendums:

1. Ensure the tile/material being used is no taller than 1/2” above the channel surface once inserted.
2. Prior to installing the tile/material, remove all hole plugs in the channel(s) where it will be inserted.
3. All tile/material that is going to be inserted in the sill spaces must have clearance or relief channels on the underside to allow water to flow underneath and into the sill’s drain holes.
4. If using the tile/material in the channel between the interior track and the condensation drain, ensure no drains in the condensation drain channel or the interior track are obstructed; otherwise, water will not be able to drain out of the space.
5. Per the track filler installation steps, maintain 3/8” space away from each drain hole cover.

Failure to follow these steps will hinder water drainage and create a high likelihood of flooding into the interior.

EURO-WALL®
2026 Euro-Wall, LLC • www.euro-wall.com

L. Install the Panels

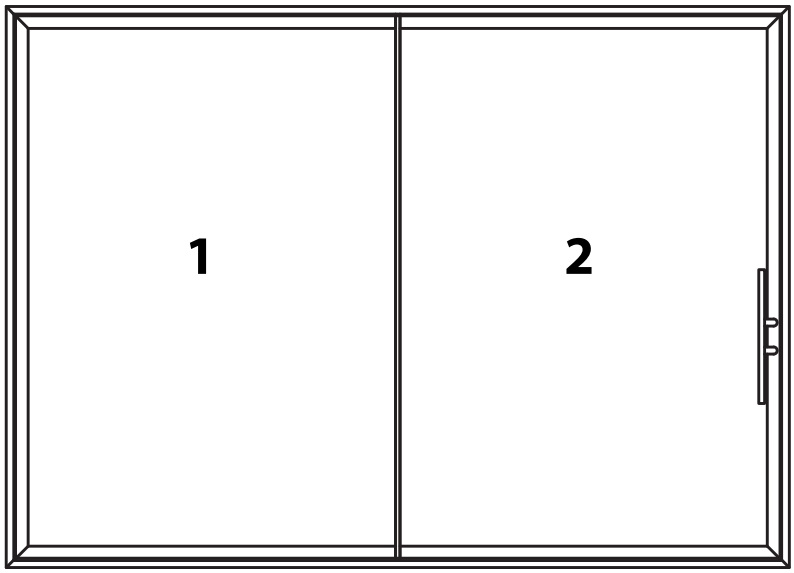

Step L.1 - Check Panel Install Sequence

Included with the installation material will be a document that illustrates the panel install order with each panel numerically labeled.

Step L.2 - Panel Installation Preparation

Before installing panels, place wood, protective foam, cardboard or other similar protectant over the sill to protect from damage during the panel installation process. Additionally, have a ladder near the panel installation for ease of installation.

Each door panel comes with its own clearly labeled box which includes all hardware for that particular panel. Locate those and set aside. Move the first panel into position for install. When moving panels, always move them with at least two people making sure to **NEVER walk the panels.** Walking panels could knock the panel out of square. Use cup suction lifters for easier mobility when moving larger panels.

QR CODE: PREPARING FOR PANEL INSTALL

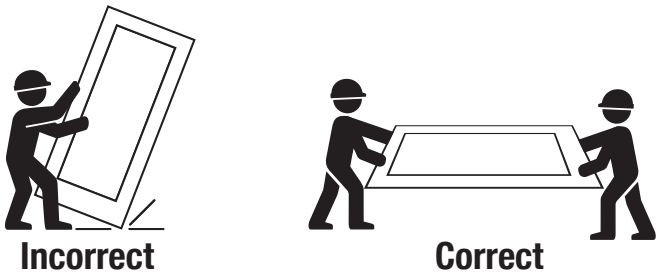

QR CODE: DON'T "WALK" PANELS

Step L.3 - Install Panels

Angle the panel with the top of the panel facing forward towards the opening. **1)** Lift and insert the top rail into the header track then **2)**swing the bottom rail into the opening and onto the bottom sill track.

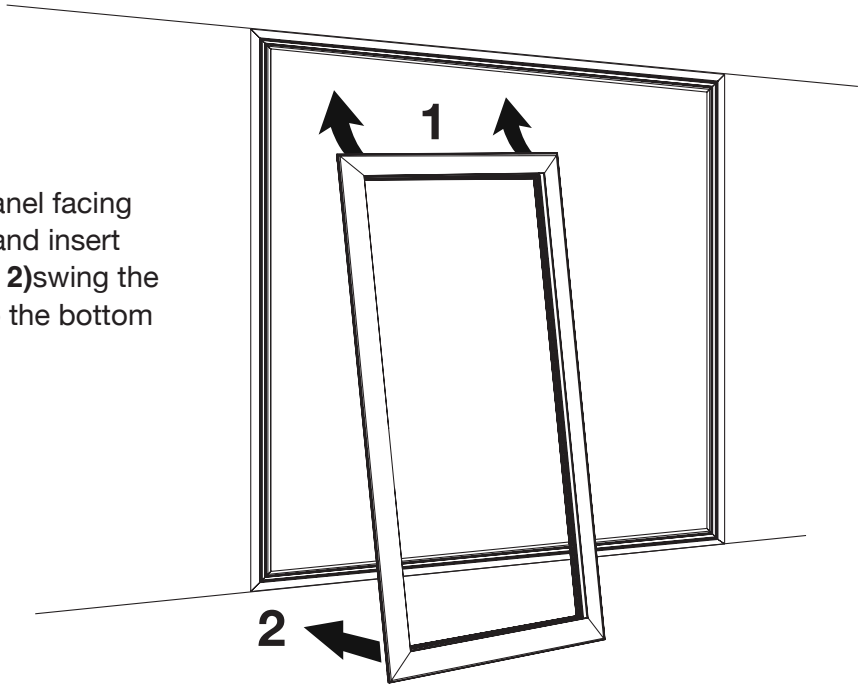

QR CODE: INSTALL THE PANELS

EURO-WALL®
2026 Euro-Wall, LLC • www.euro-wall.com

M. Install Pawl Catches (C0030/ C0031) & Jamb Trim (E0013)

Step M.1 - Large Pawl Catch (C0031)

There will be one large pawl catch (C0031) per system. This is for the primary panel and will be installed into the jamb or astragal that the primary panel closes into. This is required in order for the anti-slam device to function properly. Failure to install the large pawl catch may result in the system being locked open.

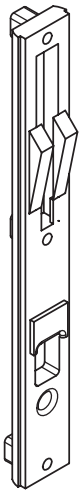

Large Pawl Catch
(C0031)

Step M.2 - Find Locations & Prepare Pawl Catches

First, locate the pawls that are pre-installed in the panel sashes. Next, locate the pawl catches located with the hardware box designated for the panel you are working on. Use a 2.5mm allen key and loosen the allen set screws on the pawl catches - preparing them for installation.

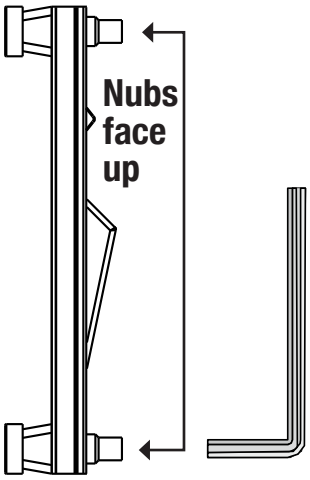

Pawl Catch (C0030)
Loosen the allen set screws on the catches before installation with a 2.5mm allen key

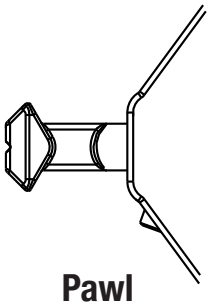

Pawl
Pawls come pre-installed in the panel sash

Step M.3 - Mark Catch Install Location

Snap the pawl catch into the jamb track. Bring the opposite panel over. Identify where the center of the pawl is in relation to the opposite panel. Mark the location on the pawl catch track with a pencil.

QR CODE: MARKING PAWL INSTALL LOCATION

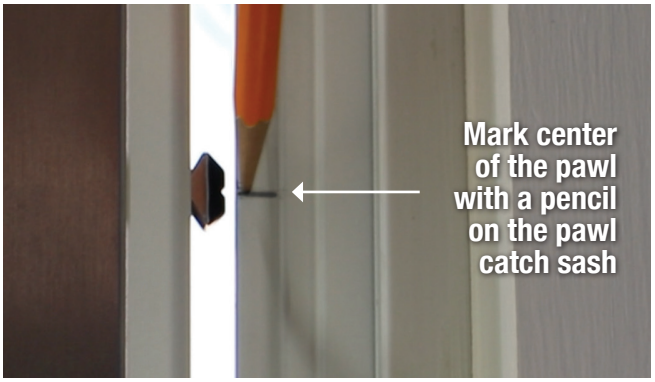

Step M.4 - Install Catch / Adjustments

Return panels to open position. The pawl catch has an identifying ridge denoting the install position. Raise the pawl catch up and even with the marked location and tighten the allen set screws on the pawl catch with a 2.5mm allen key. Slowly bring over the opposite panel and close the door. Engage the locking lever. If the pawls do not securely engage with the catches, **you will need to loosen the pawl set screw and rotate the pawl to lengthen or shorten the pawl reach to ensure proper closure (See figure M.4).**

When properly installed the locking lever will engage the pawl into the pawl catch securing the door system. Clean off your pencil mark location. **Repeat previous steps for all pawl locations.**

QR CODE:
INSTALLING PAWL CATCHES

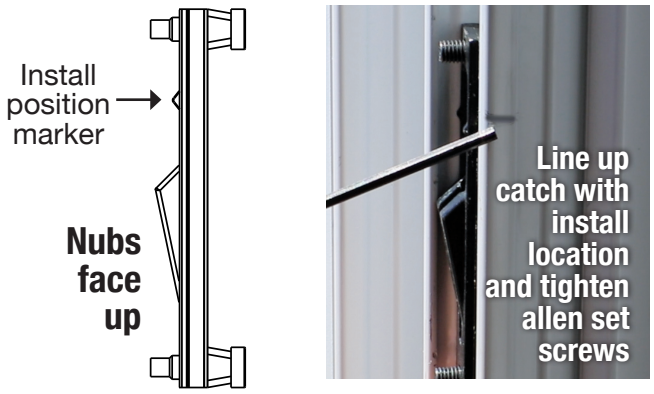

Figure M.4: Adjusting the Pawl

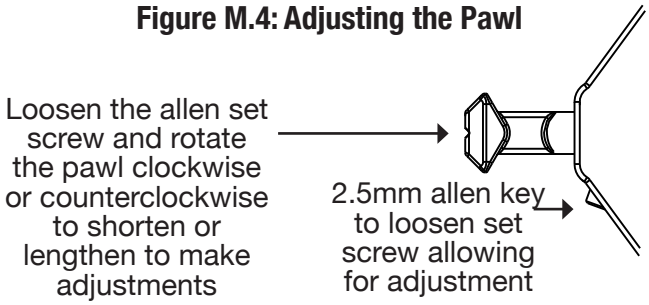

Step M.5 - Install Jamb Trim (E0013)

Measure the distance for each gap between the pawl catches and cut your jamb trim to fit. Starting at one end, push into sash and snap the trim into place the entire length using a rubber mallet. Repeat for each pawl catch gap.

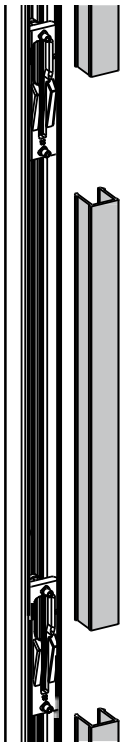

QR CODE: INSTALLING PAWL CATCH TRIM PIECES

EURO-WALL®
2026 Euro-Wall, LLC • www.euro-wall.com

N. Pocket Applications

Step N.1 - Pocket Installation

For pocket applications, a supplied P Hook (E0011) (see figure N.1) is secured to the pocket. When the first pocket side panel is in the fully closed position it secures and interlocks with the P Hook, creating a seal between the wall and panel.

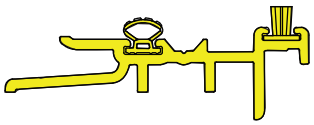

Figure N.1: P Hook (E0011) - Profile View

Step N.2 - Locate P Hook

Locate the provided P Hook with Mount (E0011 & E0096) (refer to figure N.5.). If you have more than one pocket, ensure you are using the correct P Hook for each side by locating the “T” mark, found at the top of the mount, and verifying it is at the top of the system.

Figure N.5: P-Hook Assembly

“T” Mark

Step N.3 - P Hook Placement

Fully close the door system (See figure N.6). Slide the P Hook and mount behind the panel interlock and adjust until the P Hook fits snugly with the panel interlock (See figure N.7).

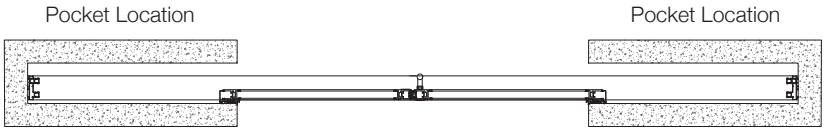

Figure N.6: Fully Close and Secure Panels

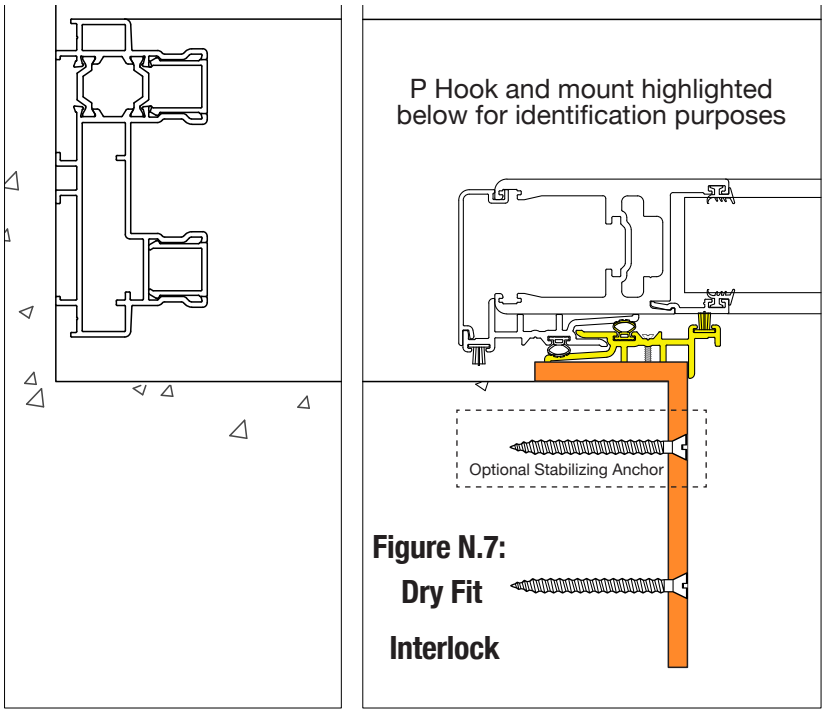

Figure N.7: Dry Fit Interlock

Step N.4 - Secure P Hook Assembly

Secure the mount to the pocket at the marked location in Figure N.8 with flat head screws. The screw type and size used will vary depending on your substrate conditions and are not provided by Euro-Wall. Additional, optional stabilizing anchoring is available to keep the mount from twisting.

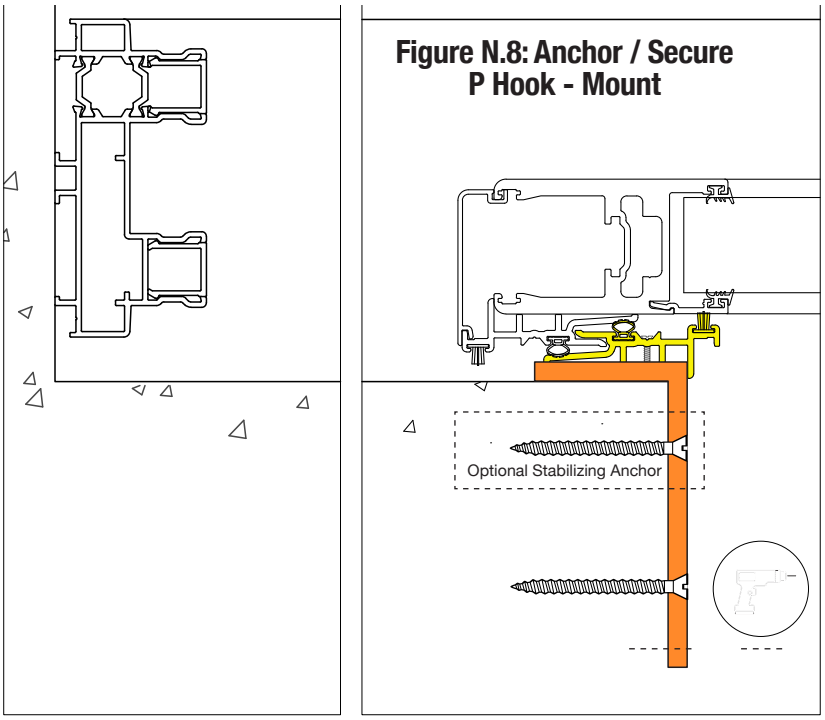

Figure N.8: Anchor / Secure P Hook - Mount

EURO-WALL®
2026 Euro-Wall, LLC • www.euro-wall.com

Step N.5 - Install Pocket Riser Gap Filler (C0342)

Using 1/4” bead of sealant, apply the pocket riser gap filler between the sill track and condensation drain/riser and in the header channel where the P-hook meets the frame.

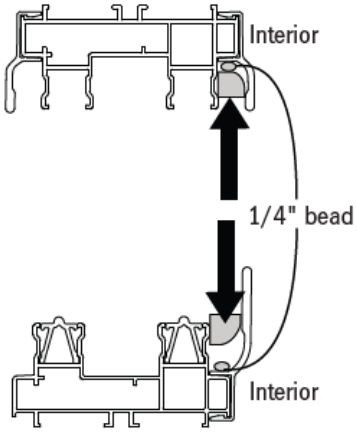

O. Pocket Followers

Step 0.1 - Pocket Follower Installation Guide

If your system was ordered with an optional pocket follower there are two ways it can be installed. Double-sided tape is the standard method & is used on most installs. Screws are only an option when you can reach the inside of the pocket.

Method 1: 3M Double-Sided Tape (Standard)

1. **Prep the surfaces.** Make sure the edge of the pocket panel & the back of the pocket follower are clean, dry & free of dust or debris so the tape bonds properly.
2. **Apply the tape.** Run 2 strips of 3M double-sided tape down the full length of the pocket follower.
3. **Remove the liner.** Peel the backing off both strips of tape.
4. **Attach a suction cup (optional).** Press a small glass cup onto the face of the pocket follower. This gives you a handle for positioning it cleanly on the end of the panel.
5. **Position the follower.** Line the pocket follower up with the edge of the pocket panel before making contact. The tape grabs on contact, so get it right the first time.
6. **Press it on.** Press firmly along the full length of the follower to seat the tape.

   Remove the suction cup.
7. **Why tape is preferred:** If you ever need to get into the pocket later, the pocket follower can be pushed or forced off the panel.

Method 2: Self-Tapping Screws

Use this method only if you can access the inside of the pocket.

1. **Confirm access.** Verify you can reach the inside of the pocket to drive the screws.
2. **Position the follower.** Hold the pocket follower in place on the edge of the pocket panel.
3. **Fasten.** Secure the pocket follower with self-tapping screws from inside the pocket.

Caution: Once installed with screws, the pocket follower can only be removed from inside the pocket. If that access is lost later (for example, after finishes are complete), the follower cannot be removed. When in doubt, use tape.

EURO-WALL®
2026 Euro-Wall, LLC • www.euro-wall.com

P. Install the Header Interlock Plug

Step P.1 - Identifying the Header Interlock Plug

You will need to install the Header Interlock Plug **at every panel interlock.** *See **Step P.2** below to identify the Header Interlock Plug and understand how it functions.*

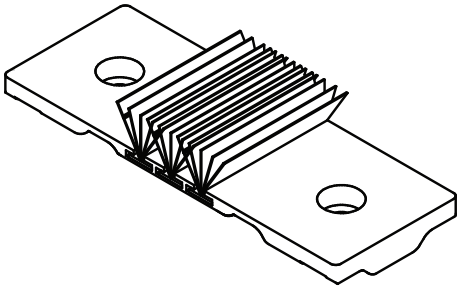

Step P.2 - Installing the Header Interlock Plug in Header

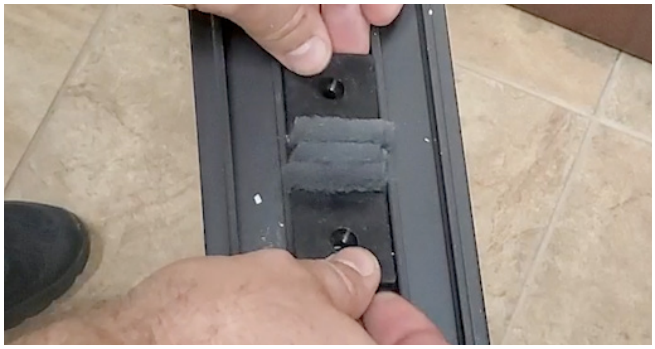

Insert one side of header interlock plug.

With one edge inserted, rotate cover until sitting flush.

Secure the header interlock plug with provided self-tapping screws (C0037).

Q. Adjusting the Panels

A Note About Making Adjustments

There are two adjustments that can made to panels to ensure proper closure of your system: 1) pawl adjustments and 2) roller adjustments. (See page 22, step M.4 for making pawl adjustments). The panel rollers of your door system are factory set to work precisely with your installation. Therefore, adjusting the pawls should ensure proper closure of your door system in almost every situation. **Roller adjustments should ONLY be made as a last option and is not recommended.**

Depending on the completion date of your project, your multi slide panel will have one of the following scenarios. Follow the step for whichever scenario your project has:

Step Q.1 - Making Vertical Adjustments

Prior to April 2021

At the base of all interlock stiles you will see two screws. To make vertical adjustments, remove the bottom screw **ONLY. If you remove the top screw, you will cause a complete panel failure.** After the bottom screw is removed at the interlock, insert a #6 allen wrench into the screw hole and rotate clockwise or counterclockwise to raise or lower the panel.

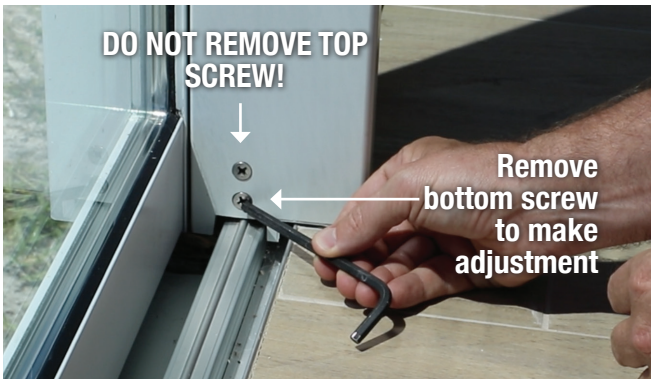

Figure Q.1 - Prior to April 2021

Step Q.2 - Making Vertical Adjustments

April 2021 or Newer

At the base of all interlock stiles you will see two screws and a 1/2” hole plug (C0033). To make vertical adjustments, remove the 1/2” hole plug. After the 1/2” hole plug is removed at the interlock, insert a #6 allen wrench into the hole and rotate clockwise or counterclockwise to raise or lower the panel.

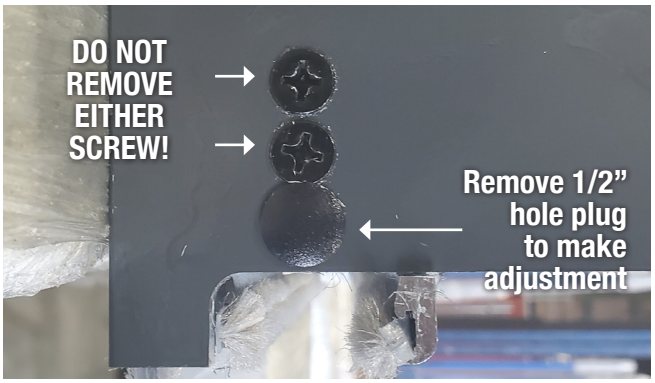

Figure Q.2 - Current (After 2021)

NOTE: Each roller adjustment ONLY lowers or raises that end of the panel. To ensure your panel rolls smoothly and evenly in the track the opposite panel roller will need to be adjusted in the same increment as the first adjusted roller. Additionally, each panel in the system will need to have both rollers adjusted in the same increment to ensure the interlocks catch and grab correctly.

R. Installing the Interlock End Caps

After the panels are installed and adjusted, the interlock end caps need to be installed at the top and bottom of every interlock. *(Interlock end caps can only be used on panels produced in April, 2021 or newer)*

Step R.1 - Remove Assembly Screw

Remove either the top panel assembly screw at the bottom of the panel or the bottom assembly screw at the top of the panel. Apply sealant to the back of the interlock end cap and screw in using the panel assembly screw. Do not tighten.

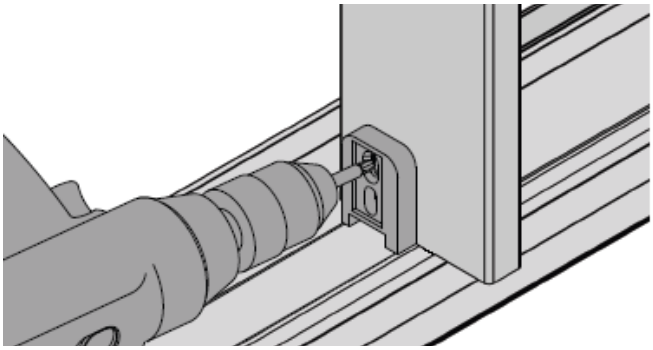

Step R.2 - End Cap Placement

Push on the interlock end cap until the weatherstrip is making contact with the frame and then tighten the screw to secure into place.

NOTICE

Push down gently until there is contact between the weatherstrip and the sill track. Too much pressure could result in product damage.

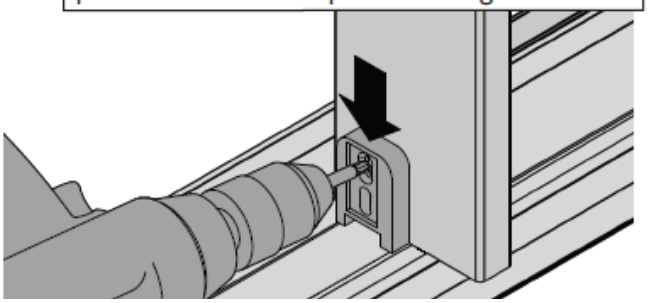

Step R.3 - Install End Cap Setting Block

Remove the liner from the adhesive side of the interlock end cap setting block and attach to the interlock end cap to cover the holes and screw. Repeat for the top and bottom of every interlock.

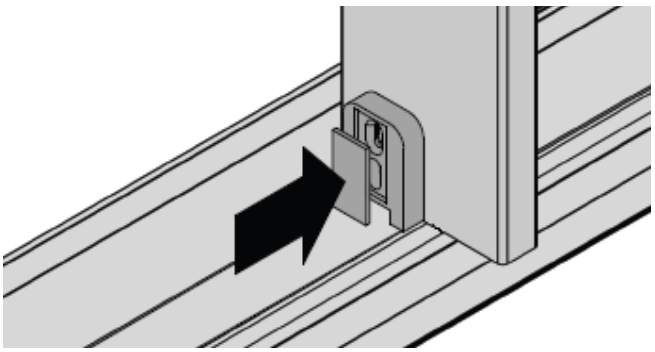

S. Locking Fixed Panel

Step S.1 - Locking Down Fixed Mechanism

Line fixed mechanism up with adjustment hole. A 7mm square allen key or equivalent-sized flathead screwdriver must be able to fit in. If the mechanism is difficult to engage, there are horizontal adjustments that can be made to pawls in the stile. Whether in or out, adjust until operation is smooth.

After locking the panel down, place a 1/2” hole plug (C0033) into the hole to seal it.

Be sure to make any and all adjustments prior to removing the removable allen key or screwdriver.

T. Door Bumper (C0042) Installation

Step T.1 - Door Bumper Install

Do not begin this step until all adjustments have been made to the door. The door bumper kit will include a bumper, a mounting bracket and three screws. Bumper should be mounted on the panel adjacent to the primary active panel. Bumper is typically installed on the interior side, but can be installed on the exterior side. Bumper can be installed on the top or bottom of this panel. Use the handle of the operational panel to indicate placement of the bumper. Open the panel until there’s a 1/4” reveal on your daylight opening of the adjacent panel. Drill three holes with a #21 drill bit (C0388) and tap with a 10-32. When mounting the bracket, countersunk holes should be facing outward. Mount bracket onto where holes are drilled. Slide the groove of the bumper onto the bracket. *(continued on next page)*

EURO-WALL®
2026 Euro-Wall, LLC • www.euro-wall.com

Please note: If the pull bar is an offset pull bar, spacing of bumper will need to increase to avoid hand on the pull bar hitting the adjacent panel.

QR CODE:
INSTALLING THE DOOR BUMPER

U. Recessed Pull Transport Screw Removal

Step U.1 - Remove the Screw

Once the panels are installed, remove any shipping screws from the bottom of the recessed pulls.

V. Postless Corner Weatherstrip Installs

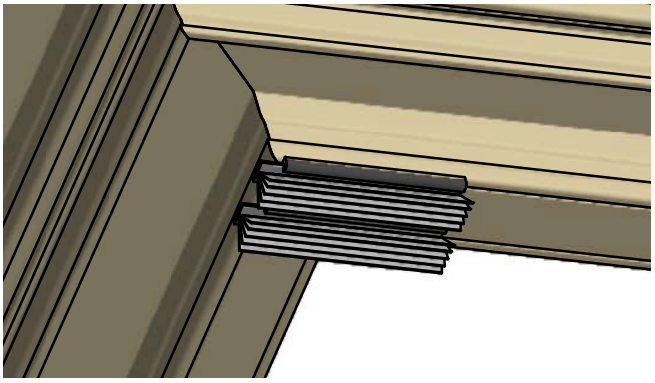

Step V.1 - Frame Weatherstrip Holder

Snap the frame weatherstrip holder into the header track of the primary panel at the corner connection. Slide the holder all the way to the corner of the header.

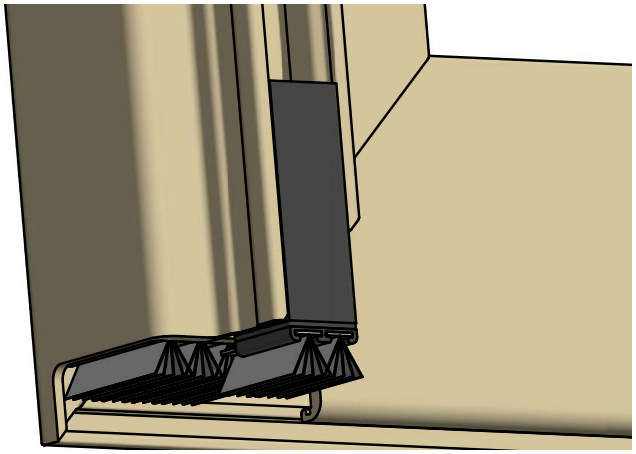

Step V.2 - Corner Astragal Weatherstrip Holder (C0078)

Snap into the astragal and slide down until it hits the condensation drain. Above the astragal weatherstrip holder you will be infilling this space with jamb trim (E0013).

W. Astragal Gap Filler

Step W.1 - Apply Gap Filler

If you have a center meet configuration, apply the astragal gap filler at both the top and bottom of the astragal and the dust plug at the top of the astragal. Adjust up or down to eliminate any daylight. Once gap fillers are in place, cut jamb trim to size and insert between the top & bottom astragal gap fillers.

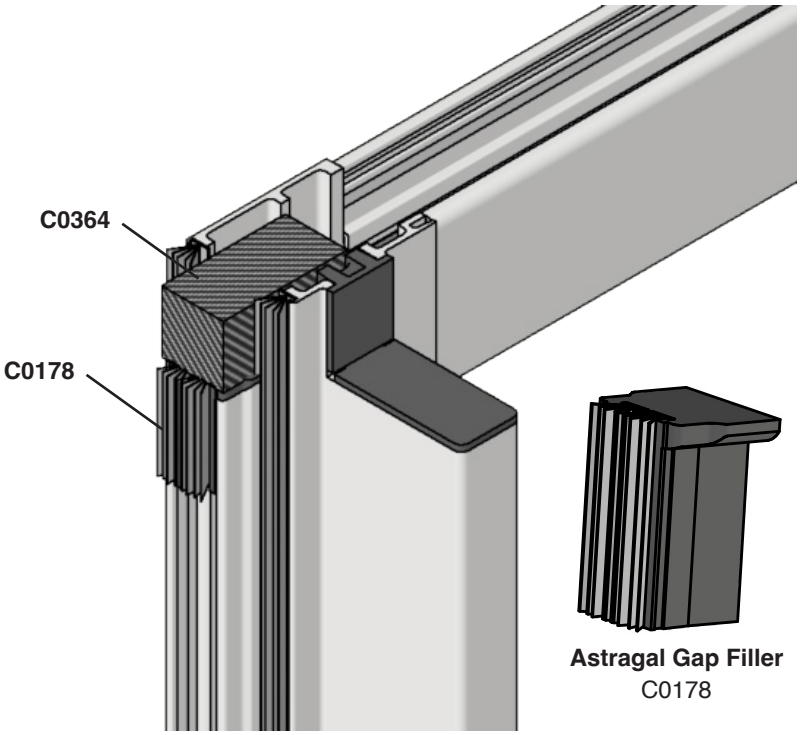

X. Water Management (C0035) System Installation

(For Full Embed Systems Only)

Required Tools

- ✓ Channel locks
- ✓ Caulk gun
- ✓ 100% silicone

1

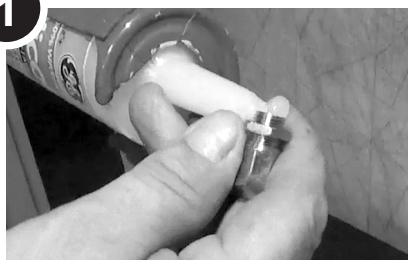

Silicone the exposed threading on the brass hose barb making sure not to obstruct the opening.

2

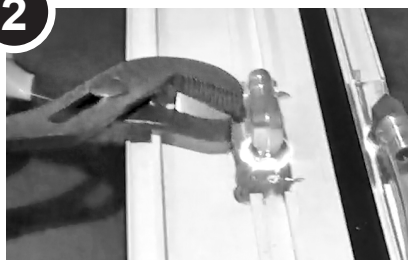

Install the brass hose barb onto the bottom side of the sill track - secure tightly with channel locks.

QR CODE: WATER MANAGEMENT INSTALLATION

EURO-WALL®
2026 Euro-Wall, LLC • www.euro-wall.com

Y. Maintenance & Care

Panel Protective Film

If your project comes with protective film, remove all protective film from panels, frames and any other metal extrusion within 30 days of job delivery. Failure to do so could cause finish damage voiding the product warranty.

Handles and Hardware

Wipe down the visible surfaces with warm soapy water on a soft cloth and then rinse off by wiping with a clean damp cloth. Spray a thin film of Boeshield T-9 (or other corrosion preventative spray such as CRC Marine 66, Innox or CorrosionX, or with machine oil) on any exposed hardware, including but not limited to: handles, locking mechanisms, hinges, unpainted or uncoated metal components, brackets, bearings, exposed screws etc. Be careful to avoid overspray and be sure to wipe down any overspray that does occur. Take care to avoid spray onto wood components, as staining may occur. Use a soft cloth to buff out any excess residual film.

Water Management

If your sill track comes with a Euro-Wall water management configuration, ensure that all drainage points are free and clear of debris.

Sill Track and Wheels

Wipe all contaminant clear from sill track surfaces with a damp cloth and mild detergent, dry with clean soft cloth. Using a spray machine oil or one of the corrosion preventative sprays (such as, Boeshield T-9, CRC Marine 66®, Innox® or CorrosionX®) spray underneath the panels and into the wheel assembly. Operate the door across the sill track to ensure the track receives lubrication / anti corrosion spray from the wheels. Repeat as necessary until the wheels and the track is properly covered. Wipe down any overspray.

Frequency

Regular maintenance is required for all hardware, even stainless steel, to keep manufacturer's warranty in place. Failure to provide proof of maintenance will void any warranty.

Carry out maintenance procedures with the following minimum recommendations:

- General environments - every 3 months
- Marine, industrial environments, within 5 miles of a body of water and / or a pool area - every month.
- Boeshield T-9 re-application: every 6 months for general environment, and up to every 3 months for marine/industrial environments, or within 5 miles of a body of water and/or a pool area.

NOTE: Maintenance is required to extend the life of your door system and to maintain the Euro-Wall Warranty.

EURO-WALL®
2026 Euro-Wall, LLC • www.euro-wall.com